RAYSTAR

RAYSTAR Optronics, Inc.
曜凌光電股份有限公司

曜凌光電股份有限公司
Raystar Optronics, Inc.
42881台中市大雅區科雅路25號5樓
5F, No. 25, Keya Road, Daya Dist., Taichung City 42881, Taiwan
T：+886-4-2565-0761 | F：+886-4-2565-0760
sales@raystar-optronics.com | www.raystar-optronics.com

RFF700C5-AIW-DNG

SPECIFICATION

CUSTOMER:

APPROVED BY	
PCB VERSION	
DATE	

FOR CUSTOMER USE ONLY

SALES BY	APPROVED BY	CHECKED BY	PREPARED BY

Release DATE:

TFT Display Inspection Specification: https://www.raystar-optronics.com/download/products.htm
Precaution in use of TFT module: https://www.raystar-optronics.com/download/declaration.htm

Revision History

VERSION	DATE	REVISED PAGE NO.	Note
0	2023/01/10		First issue

RAYSTAR OPTRONICS

Contents

1.Module Classification Information

2.Summary

3.General Specifications

4.Interface

5.Contour Drawing

6.Absolute Maximum Ratings

7.Electrical Characteristics

8.Timing Characteristics

9.Optical Characteristics

10.Reliability

11.Touch Panel Information

12.Other

RAYSTAR OPTRONICS

1.Module Classification Information

R	F	F	70	0C5	-	A	I	W	-	D	N	G
1	2	3	4	5	-	6	7	8	-	9	10	11

Item	Description	
1	R：Raystar Optronics Inc.	
2	Display Type：F→TFT Type, J→ Custom TFT	
3	Solution: A: 128x160 B:320x234 C:320x240 D:480x234 E:480x272 F:800x480 G:640x480 H:1024x600 I:320x480 J:240x320 K:1280x800 L:240x400 M:1024x768 N:128x128 O:480x800 P:640x320 Q:800x600 S:480x128 T:800x320	
4	Display Size：7.0” TFT	
5	Version Code.	
6	Model Type: A：TFT LCD E：TFT+FR+CONTROL BOARD J：TFT+FR+A/D BOARD N：TFT+FR+A/D BOARD+CONTROL BOARD S：TFT+FR+POWER BOARD (DC TO DC) 1：TFT+CONTROL BOARD	6：TFT+FR H：TFT+D/V BOARD I：TFT+FR+D/V BOARD B：TFT+POWER BD
7	Polarizer Type, Temperature range, View direction	I→Transmissive, W. T, 6:00 ; C→Transmissive, N. T, 6:00 L→Transmissive, W.T,12:00 ; F→Transmissive, N.T,12:00 Y→Transmissive,W.T, IPS TFT ; A→Transmissive, N.T, IPS TFT Z→Transmissive, W.T, O-TFT R→Transmissive, Super W.T, O-TFT N→Transmissive, Super W.T, 6:00; Q→Transmissive, Super W.T, 12:00 V→Transmissive, Super W.T, VA TFT
8	Backlight	W：LED, White / H：LED, High Light White F：CCFL, White
9	Driver Method	D: Digital A: Analog L：LVDS M:MIPI
10	Interface	N：without control board A：8Bit B：16Bit S:SPI Interface R: RS232 U:USB I: I2C
11	TS	N：Without TS S：resistive touch panel C：capacitive touch panel capacitive touch panel (G-F-F) G：capacitive touch panel(G-G)

RAYSTAR OPTRONICS

2.Summary

TFT 7.0”is a TN transmissive type color active matrix TFT liquid crystal display that use amorphous silicon TFT as switching devices. This module is a composed of a TFT_LCD module, It is usually designed for industrial application and this module follows RoHs.

RAYSTAR OPTRONICS

3.General Specifications

- Size: 7.0 inch
- Dot Matrix: 800 x RGBx480(TFT) dots
- Module dimension: 164.9(H) ×100(V) ×7.5(D) mm
- Active area: 154.08 (H) × 85.92 (V) mm
- Pixel pitch: 0.1926(W) x 0.1790(H) mm
- LCD type: TFT, Normally White, Transmissive
- View Direction: 12 o'clock
- Gray Scale Inversion Direction: 6 o'clock
- Aspect Ratio: 16:9
- Backlight Type: LED,Normally White
- Driving IC: EK79713+EK73202 or equivalent
- TFT Interface: RGB 24 bit
- CTP IC: GT911 or equivalent
- CTP FW Version: 65
- CTP Interface: I2C
- CTP Resolution: 800 * 480
- With /Without TP: With CTP
- Surface: Glare

*Color tone slight changed by temperature and driving voltage.

RAYSTAR OPTRONICS

4.Interface

4.1. LCM PIN Definition

No.	Symbol	Function	Remarks
1-2	VLED+	Power for LED backlight(anode)	
3-4	VLED-	Power for LED backlight(Cathode)	
5	GND	Power Ground	
6	VCOM	Common Voltage	
7	DVDD	Power for Digital Circuit	
8	MODE	DE/SYNC mode select	
9	DE	Data input enable	
10	VS	Vertical Sync input	
11	HS	Horizontal Sync input	
12-19	B7-B0	Blue data	
20-27	G7-G0	Green data	
28-35	R7-R0	Red data	
36	GND	Power Ground	
37	DCLK	Sample clock	
38	GND	Power Ground	
39	L/R	Left/right selection	
40	U/D	Up/Down selection	
41	VGH	Gate On Voltage	
42	VGL	Gate Off Voltage	
43	AVDD	Power for Analog Circuit	
44	RESET	Global reset pin	
45	NC	No connection	
46	VCOM	Common Voltage	
47	DITHB	Dithering function	
48	GND	Power Ground	
49-50	NC	No connection	

RAYSTAR OPTRONICS

4.2. CTP PIN Definition

Pin	Symbol	Function	Remark
1	VSS	Ground for analog circuit	
2	VDDT	Power Supply	
3	SCL	I2C clock input	
4	NC	No connect	
5	SDA	I2C data input and output	
6	NC	No connect	
7	RST	External Reset, Low is active	
8	NC	No connect	
9	INT	External interrupt to the host	
10	GND	Ground for analog circuit	

RAYSTAR OPTRONICS

5.Contour Drawing

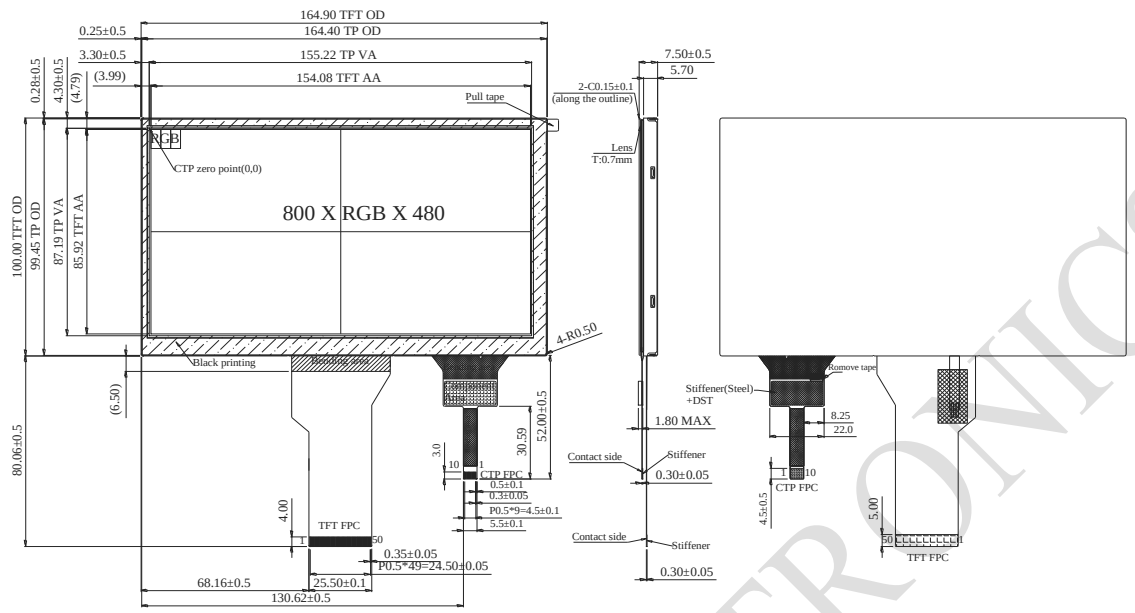

TFT

PIN NO	SYMBOL	PIN NO	SYMBOL	PIN NO	SYMBOL
1	VLED+	21	G6	41	VGH
2	VLED+	22	G5	42	VGL
3	VLED-	23	G4	43	AVDD
4	VLED-	24	G3	44	RESET
5	GND	25	G2	45	NC
6	VCOM	26	G1	46	VCOM
7	DVDD	27	G0	47	DITHB
8	MODE	28	R7	48	GND
9	DE	29	R6	49	NC
10	VS	30	R5	50	NC
11	HS	31	R4		
12	B7	32	R3		
13	B6	33	R2		
14	B5	34	R1		
15	B4	35	R0		
16	B3	36	GND		
17	B2	37	DCLK		
18	B1	38	GND		
19	B0	39	L/R		
20	G7	40	U/D		

CTP

PIN NO	SYMBOL
1	VSS
2	VDDT
3	SCL
4	NC
5	SDA
6	NC
7	RST
8	NC
9	INT
10	GND

The non-specified tolerance of dimension is ±0.3 mm .

RAYSTAR OPTRONICS

6.Absolute Maximum Ratings

Voltage (AGND=GND=0V, Ta = 25℃)

Item	Symbol	Values		Unit	Remark
		Min.	Max.		
Operating Temperature	TOP	-20	+70	℃	
Storage Temperature	TST	-30	+80	℃	
Power Voltage	DVDD	-0.3	3.96	V	
	AVDD	-0.5	14.85	V	
	VGH	-0.3	40.0	V	
	VGL	-20.0	0.3	V	
	VGH-VGL	12.0	40.0	V	

Note: The absolute maximum rating values of this product are not allowed to be exceeded at any times.
Should a module be used with any of the absolute maximum ratings case, the module may be permanently destroyed.

RAYSTAR OPTRONICS

7.Electrical Characteristics

7.1. Typical Operation Range

Item	Symbol	values			Unit
		Min.	Typ.	Max.	
Power Voltage	VDD	3.0	3.3	3.6	V
	AVDD	10.2	10.4	10.6	V
	VGH	14.5	15	15.5	V
	VGL	-10.5	-10	-9.5	V
Input signal voltage	VCOM	3.54	4.04	4.54	V
Input logic high voltage	VIH	0.7 VDD	-	VDD	V
Input logic low voltage	VIL	0	-	0.3 VDD	V
Supply CTP	VDDT	2.8	3.0	3.3	V
	I_{VDDT}	-	12	18	mA

7.2. Current Consumption

Item	Symbol	Values			Unit	Remark
		Min.	Typ.	Max.		
Current for Driver	IGH	-	0.5	1.5	mA	VGH=15V
	IGL	-	0.5	1.5	mA	VGL=-10V
	IVDD	-	10	20	mA	VDD=3.3V
	IAVDD	-	20	50	mA	AVDD=10.4V
	IVCOM	-	0.2	1.5	mA	VCOM=3.5V

RAYSTAR OPTRONICS

7.3. Backlight Driving Conditions

Parameter	Symbol	Min.	Typ.	Max.	Unit
Supply voltage of white LED backlight	VL	8.7	9.0	10.5	V
Current for LED backlight	IL	-	180	-	mA
Power dissipation	Pd	-	1620	-	mW
LED life time	-	30000	-	-	Hr

Note : LED light bar circuit

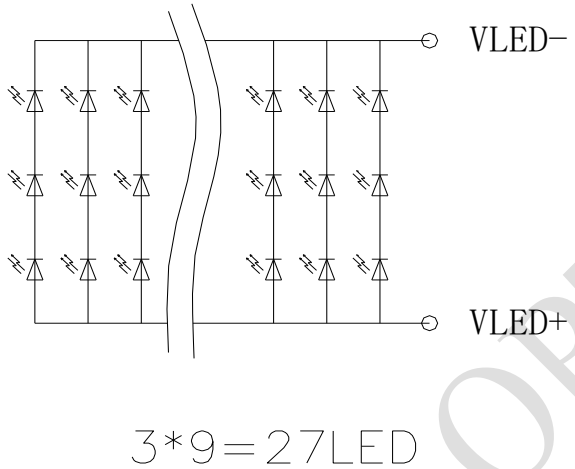

RAYSTAR OPTRONICS

8.Timing Characteristics

8.1. DC Electrical Characteristics

(TA = -20 to 85°C, VDD = 1.8 to 3.6V, AVDD = 6.5 to 13.5V, GND = AGND = GND_LVDS = 0V)

Parameter	Symbol	Condition	Min.	Typ.	Max.	Unit
Low level input voltage	Vil	For the digital circuit	0	-	0.3×VDD	V
High level input voltage	Vih	For the digital circuit	0.7×VDD	-	VDD	V
Input leakage current	Ii	For the digital circuit	-	-	±1	μA
High level output voltage	Voh	Ioh= -400 μA	VDD-0.4	-	-	V
Low level output voltage	Vol	Iol= +400 μA	-	-	GND+0.4	V
Pull low/high resistor	Ri	For the digital input pin @ VDD=3.3V	150K	250K	350K	ohm
Digital Operation current	Idd	Fclk=40 MHz, FLD=37.88KHz, VDD=3.3V	-	8	10	mA
Digital Stand-by current	Ist1	Clock and all functions are stopped	-	10	50	μA
Analog Operating Current	Idda	No load, Fclk=40MHz, FLD=37.88KHz @ AVDD=10V,V1=8V, V14=0.4V	-	10	12	mA
Analog Stand-by current	Ist2	No load, Clock and all functions are stopped	-	10	50	μA
Input level of V1 ~ V7	Vref1	Gamma correction voltage input	0.4*AVDD	-	AVDD-0.1	V
Input level of V8 ~ V14	Vref2	Gamma correction voltage input	0.1	-	0.6*AVDD	V
Output Voltage deviation	Vod1	Vo = AVSS+0.1V ~ AVSS+0.5V and Vo = AVDD-0.5V ~ AVDD-0.1V	-	±20	±35	mV
Output Voltage deviation	Vod2	Vo = AVSS+0.5V ~ AVDD-0.5V	-	±15	±20	mV
Output Voltage Offset between Chips	Voc	Vo = AVSS+0.5V ~ AVDD-0.5V	-	-	±20	mV
Dynamic Range of Output	Vdr	SO1 ~ SO1200	0.1	-	AVDD-0.1	V
Sinking Current of Outputs	IOLy	SO1 ~ SO1200; Vo=0.1V v.s 1.0V , AVDD=13.5V	80	-	-	uA
Driving Current of Outputs	IOHy	SO1 ~ SO1200; Vo=13.4V v.s 12.5V , AVDD=13.5V	80	-	-	uA
Resistance of Gamma Table	Rg	Rn: Internal gamma resistor	0.7*Rn	1.0*Rn	1.3*Rn	ohm

8.2. TIMING

Parameter		Symbol	Value			Unit
Horizontal display area		thd		800		DCLK
DCLK frequency		fclk	Min.	Typ.	Max	
			-	33.3	50	MHz
1 Horizontal Line		th	862	1056	1200	DCLK
HSD pulse width	Min.	thpw		1		
	Typ.			-		
	Max.			40		
HSD Back Porch (Blanking)		thb	46	46	46	
HSD Front Porch		thfp	16	210	354	

Vertical input timing

Parameter	Symbol	Min.	Typ.	Max.	Unit
Vertical display area	tvd		480		H
VSD period time	tv	510	525	650	H
VSD pulse width	tvpw	1	-	20	H
VSD Back Porch (Blanking)	tvb	23	23	23	H
VSD Front Porch	tvfp	7	22	147	H

8.3. Data Input Format

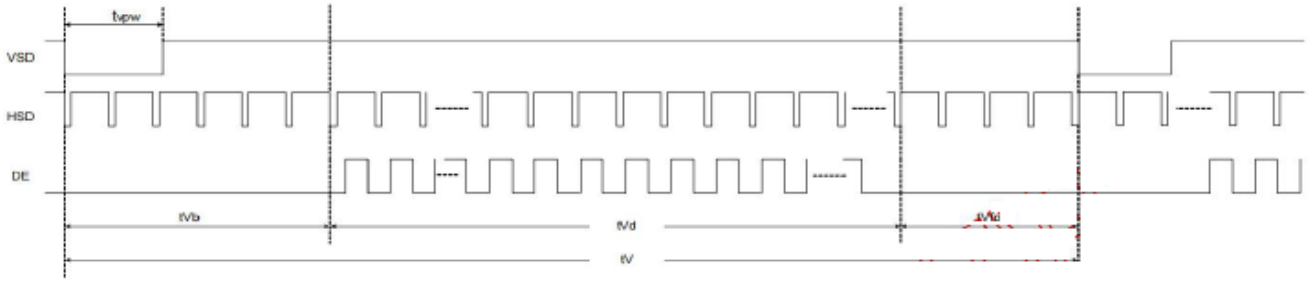

Vertical input timing

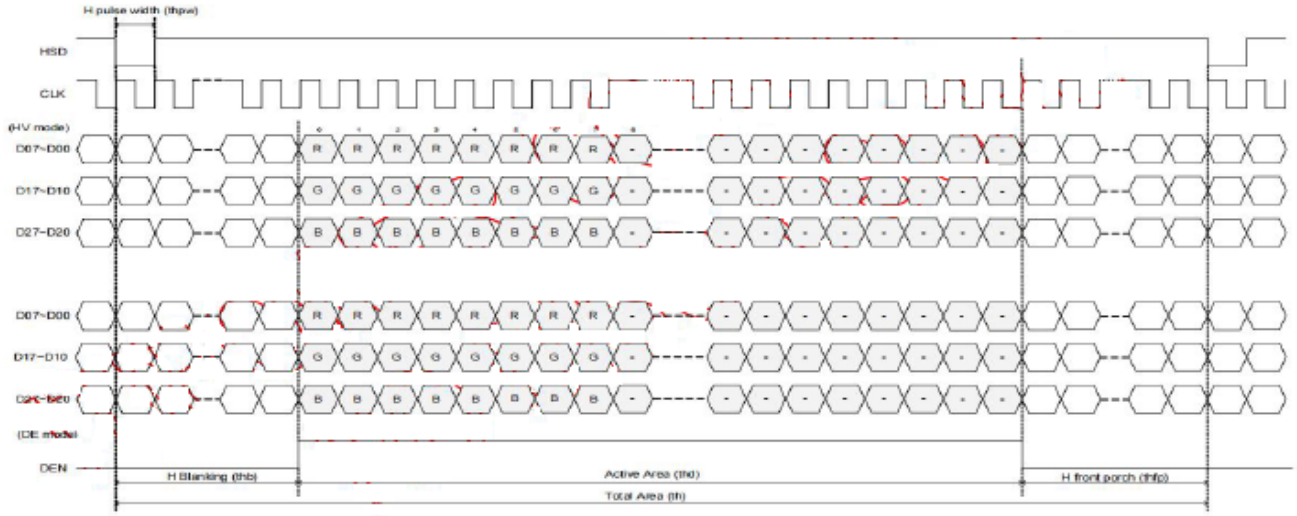

8.4. Power Sequence

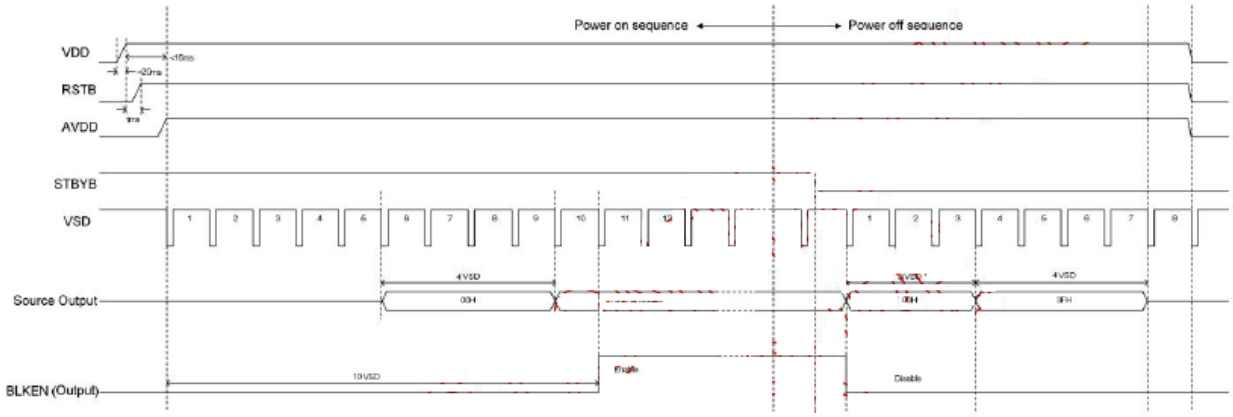

Power-On/Off Timing Sequence

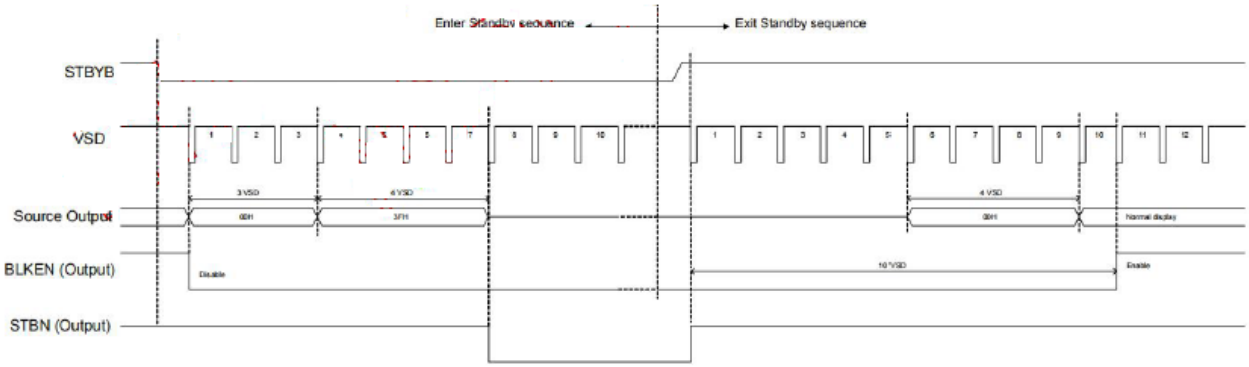

Enter and Exit Standby Mode Sequence

RAYSTAR

9.Optical Characteristics

TFT LCD characteristic

Item		Symbol	Condition.	Min	Typ.	Max.	Unit	Remark
Response time		Tr+ Tf	θ=0°、Φ=0°	-	25	50	.ms	Note 3
Contrast ratio		CR	At optimized viewing angle	500	800	-	-	Note 4
Color Chromaticity	White	Wx	θ=0°、Φ=0	0.247	0.277	0.307		Note 2,6,7
		Wy		0.265	0.295	0.325		
Viewing angle (Gray Scale Inversion Direction)	Hor.	ΘR	CR≧10	60	70	-	Deg.	Note 1
		ΘL		60	70	-		
	Ver.	ΦT		50	60	-		
		ΦB		60	70	-		
Brightness		-	-	300	340	-	cd/m2	Center of display
Uniformity		(U)	-	75	-	-	%	Note 5

Ta=25±2℃, ILED = 180mA

Note 1: Definition of viewing angle range

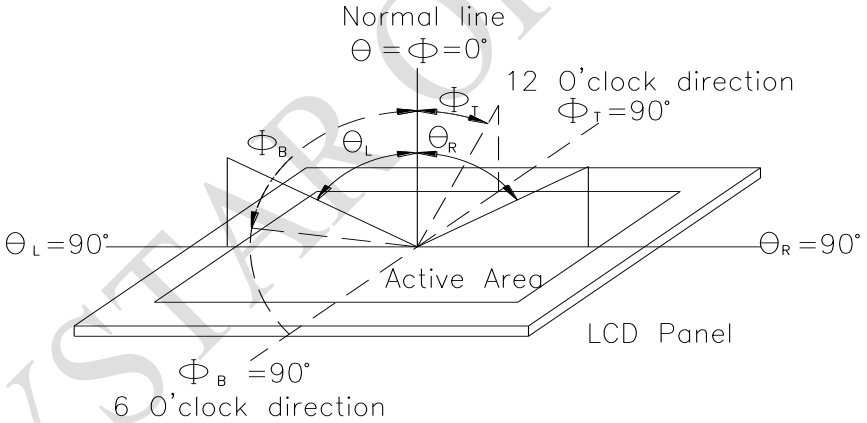

Fig.9.1. Definition of viewing angle

Note 2: Test equipment setup:

After stabilizing and leaving the panel alone at a driven temperature for 10 minutes, the measurement should be executed. Measurement should be executed in a stable, windless, and dark room. Optical specifications are measured by Topcon BM-7orBM-5 luminance meter 1.0° field of view at a distance of 50cm and normal direction.

RAYSTAR OPTRONICS

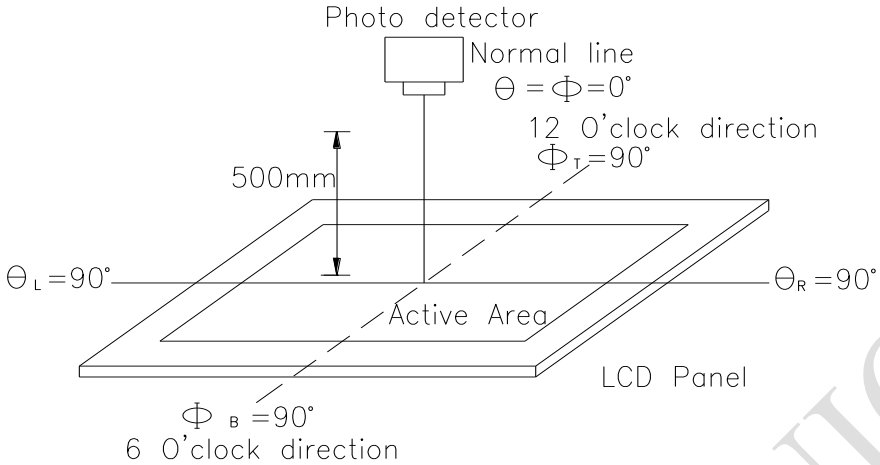

Fig. 9.2. Optical measurement system setup

Note 3: Definition of Response time:
The response time is defined as the LCD optical switching time interval between “White” state and “Black” state. Rise time, Tr, is the time between photo detector output intensity changed from 90%to 10%. And fall time, Tf, is the time between photo detector output intensity changed from 10%to 90%

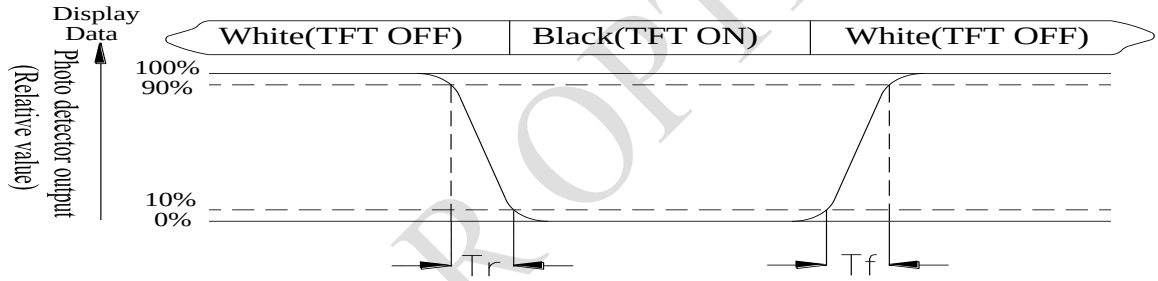

Note 4: Definition of contrast ratio:
The contrast ratio is defined as the following expression.

$$\text{Contrast ratio (CR)} = \frac{\text{Luminance measured when LCD on the "White" state}}{\text{Luminance measured when LCD on the "Black" state}}$$

RAYSTAR OPTRONICS

Note 5: Definition of Luminance Uniformity
Active area is divided into 9 measuring areas (reference the picture in below). Every measuring point is placed at the center of each measuring area.
Luminance Uniformity (U) = Lmin/Lmax x100%
L = Active area length
W = Active area width

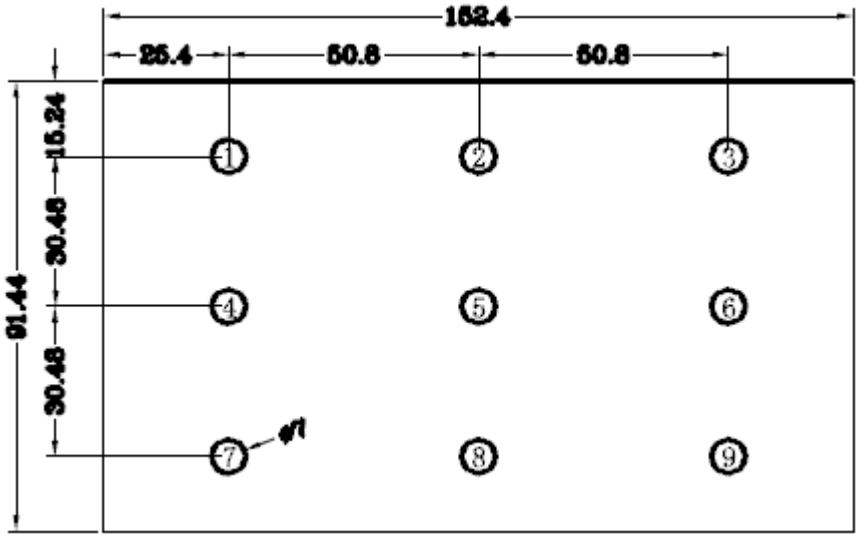

Fig9.3. Definition of uniformity

Note 6: Definition of color chromaticity (CIE 1931)
Color coordinates measured at the center point of LCD

Note 7: Measured at the center area of the panel when all the input terminals of LCD panel are electrically opened.

RAYSTAR OPTICS

10.Reliability

Content of Reliability Test (Wide temperature, -20℃~70℃)

Environmental Test			
Test Item	**Content of Test**	**Test Condition**	**Note**
High Temperature storage	Endurance test applying the high storage temperature for a long time.	80℃ 96 hrs	2
Low Temperature storage	Endurance test applying the low storage temperature for a long time.	-30℃ 96 hrs	1,2
High Temperature Operation	Endurance test applying the electric stress (Voltage & Current) and the thermal stress to the element for a long time.	70℃ 96 hrs	——
Low Temperature Operation	Endurance test applying the electric stress under low temperature for a long time.	-20℃ 96 hrs	1
High Temperature/ Humidity Operation	The module should be allowed to stand at 60℃,90%RH max	60℃,90%RH 96hrs	1,2
Thermal shock resistance	The sample should be allowed stand the following 10 cycles of operation -20℃ 25℃ 70℃ 30min 5min 30min 1 cycle	-20℃/70℃ 10 cycles	——
Vibration test	Endurance test applying the vibration during transportation and using.	Total fixed amplitude : 1.5mm Vibration Frequency : 10~55Hz One cycle 60 seconds to 3 directions of X,Y,Z for Each 15 minutes	3
Static electricity test	Endurance test applying the electric stress to the finished product housing.	VS=±6KV(contact), ±8KV(air), RS=330Ω CS=150pF 10 times	

Note1: No dew condensation to be observed.
Note2: The function test shall be conducted after 4 hours storage at the normal Temperature and humidity after remove from the test chamber.
Note3: The packing have to including into the vibration testing.

RAYSTAR OPTRONICS

11.Touch Panel Information

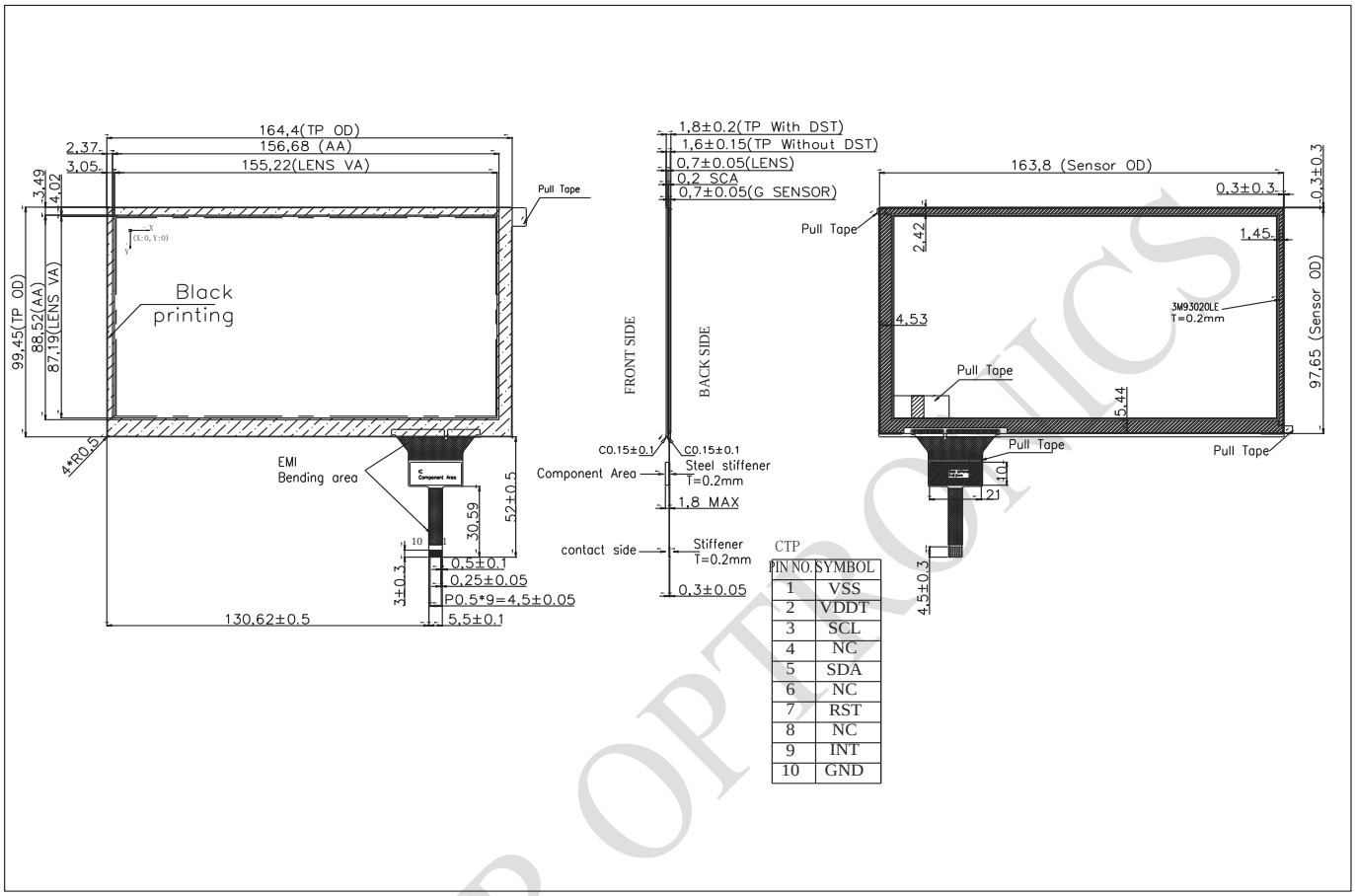

CTP

PIN NO.	SYMBOL
1	VSS
2	VDDT
3	SCL
4	NC
5	SDA
6	NC
7	RST
8	NC
9	INT
10	GND

RAYSTAR OPTRONICS

LCM Sample Estimate Feedback Sheet		
Module Number：_____		
1、Panel Specification：		
1. Panel Type：	□ Pass	□ NG ,_____
2. View Direction：	□ Pass	□ NG ,_____
3. Numbers of Dots：	□ Pass	□ NG ,_____
4. View Area：	□ Pass	□ NG ,_____
5. Active Area：	□ Pass	□ NG ,_____
6.Operating Temperature：	□ Pass	□ NG ,_____
7.Storage Temperature：	□ Pass	□ NG ,_____
8.Others：_____		
2、Mechanical Specification：		
1. PCB Size：	□ Pass	□ NG ,_____
2.Frame Size：	□ Pass	□ NG ,_____
3.Materal of Frame：	□ Pass	□ NG ,_____
4.Connector Position：	□ Pass	□ NG ,_____
5.Fix Hole Position：	□ Pass	□ NG ,_____
6.Backlight Position：	□ Pass	□ NG ,_____
7. Thickness of PCB：	□ Pass	□ NG ,_____
8. Height of Frame to PCB：	□ Pass	□ NG ,_____
9.Height of Module：	□ Pass	□ NG ,_____
10.Others：	□ Pass	□ NG ,_____
3、Relative Hole Size：		
1.Pitch of Connector：	□ Pass	□ NG ,_____
2.Hole size of Connector：	□ Pass	□ NG ,_____
3.Mounting Hole size：	□ Pass	□ NG ,_____
4.Mounting Hole Type：	□ Pass	□ NG ,_____
5.Others：	□ Pass	□ NG ,_____
4、Backlight Specification：		
1.B/L Type：	□ Pass	□ NG ,_____
2.B/L Color：	□ Pass	□ NG ,_____
3.B/L Driving Voltage (Reference for LED Type)：□ Pass □ NG ,_____		
4.B/L Driving Current：	□ Pass	□ NG ,_____
5.Brightness of B/L：	□ Pass	□ NG ,_____
6.B/L Solder Method：	□ Pass	□ NG ,_____
7.Others：	□ Pass	□ NG ,_____

>> **Go to page 2** <<

RAYSTAR OPTRONICS

Module Number：_____

5、Electronic Characteristics of Module：

1.Input Voltage：	□ Pass	□ NG ,_____
2.Supply Current：	□ Pass	□ NG ,_____
3.Driving Voltage for LCD：	□ Pass	□ NG ,_____
4.Contrast for LCD：	□ Pass	□ NG ,_____
5.B/L Driving Method：	□ Pass	□ NG ,_____
6.Negative Voltage Output：	□ Pass	□ NG ,_____
7.Interface Function：	□ Pass	□ NG ,_____
8.LCD Uniformity：	□ Pass	□ NG ,_____
9.ESD test：	□ Pass	□ NG ,_____
10.Others：	□ Pass	□ NG ,_____

6、Summary：

Sales signature：_____

Customer Signature：_____ **Date**： / /

RAYSTAR OPTRONICS